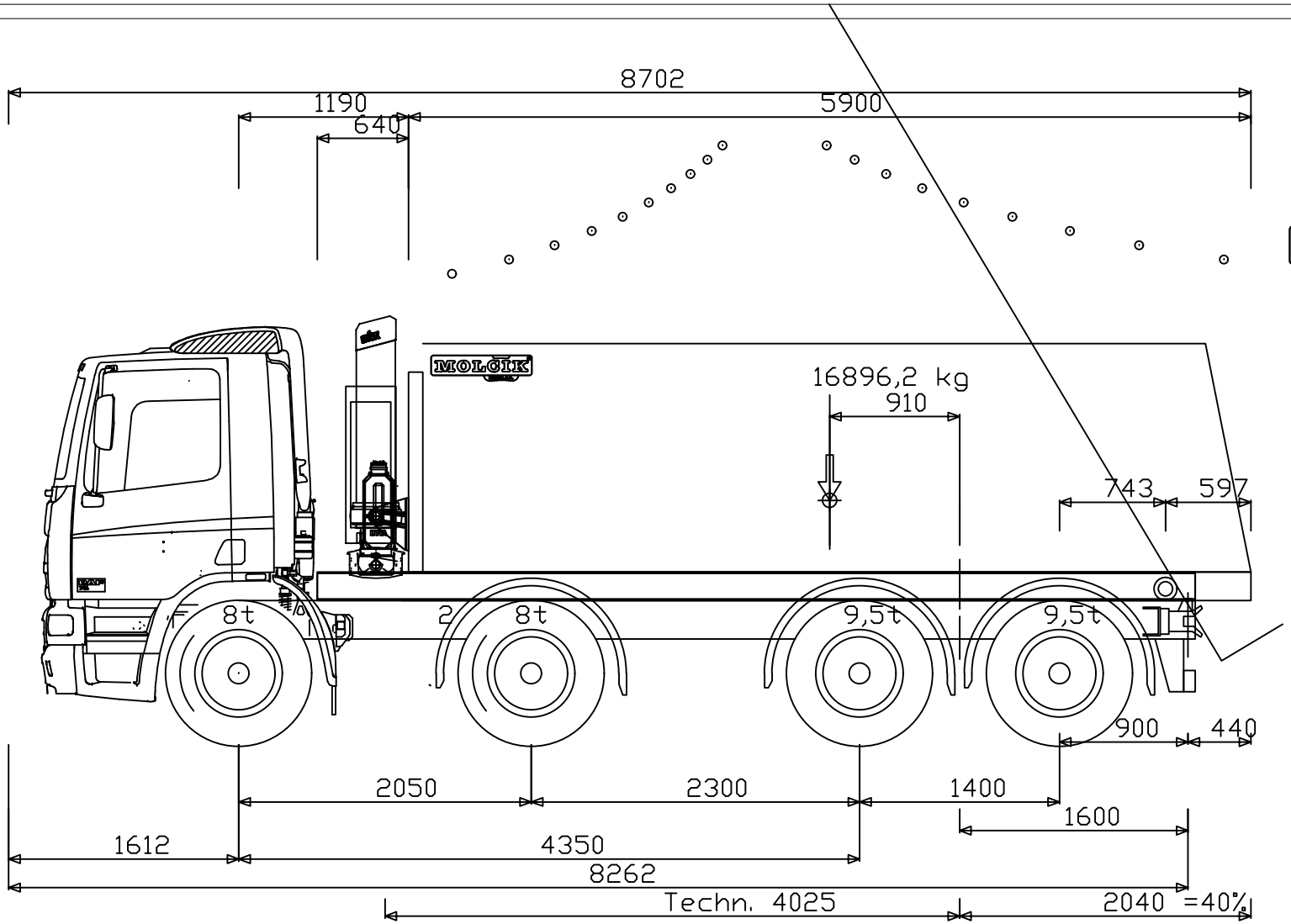

Nenaložený	9026 (60%) (4513+4513)	6078 (3039+3039)	= 15104 kg
Naložený	12846 (40%) (6423+6423)	19154 (9577+9577)	= 32000 kg
Max	16000 (8000+8000)	19000 (9500+9500)	= 32000 kg

DAF FAD CF85 - rigid chassis 8x4 5.05 Day Cab

1: HYVA FC A191-4-05460-000-K0343
2: HYVA HYVA FRONT MOUNTED OILTANK SKIPLOADER
3: REZERVA